Technical Approval

SINTEF Building and Infrastructure confirms that

Guardian Fastening System

meets the provisions regarding product documentation given in Norwegian building regulations, with properties, fields of application and conditions as stated in this document

1. Holder of the approval

Afast BV
Vlamovenweg 12a
NL-5708 JV Helmond
Netherlands
www.afast.nl

2. Manufacturer

Afast BV and manufacturers according to product control description.

3. Product description

Guardian Fastening System is a system for mechnical fastening of roof membranes and thermal insulation in external roof constructions. Guardian Fastening System consists of the following components, see fig 1-27:

- Tube washers made of polypropylene, used together with screws and concrete nails, fig. 1-3.
- Centric system washer, fig. 4.
- Steel washer, made of Senzimir zink coated or stainless steel, fig. 5 - 9.
- Concrete nails and screws made of Enduroguard coated steel or stainless steel according to SIS 2333, fig. 10-14.
- Plastic plugs for fastening in concrete, fig. 15 -16.
- Screws for fixing in light weight concrete, fig. 17 – 19.
- Screws for fixing in metal sheets made of Enduroguard coated steel, fig. 20-26.
- Screws for fixing in wood, fig. 27.

4. Fields of application

Guardian Fastening System is used as mechanical fastening of thermal insulation for flat roofing, bitumen based multi layer or single ply roof coverings, or plastic based single ply roof coverings, to roof constructions made of profiled steel decks, concrete, light weight concrete and wood.

5. Properties

Anchor load capacities

Design load capacities for tube washers used with various types of roofing membranes are shown in Table 1. Table 2 and 3 shows the pullout capacity of screws and nails from the substructure.

Corrosion protection

All steel components in the Guardian Fastening System have a corrosion protection corresponding to application category KLA as defined in SINTEF Byggforsk Design Sheet No. 544.206, and which also corresponds to corrosion protection according to ETAG 006-5.3.7 Annex D, 15 kesternich-cycles.

All screws in the Guardian Fastening System are made of carbon steel coated with Enduroguard 15 which has a zinc rich base and a multilayer top coat.

Safety against selfunwinding

Guardian BS-48, BSHD-48, PS-48, DBT-48, BS-55, BS-61 have been tested for safety against selfunwinding, and are considered safe in use together with Guardian tube washers.

Application properties

Guardian Fastening System has been evaluated as being acceptable for use under the following conditions:

- Installation at temperatures down to –20 °C.
- Oblique loading when fastened at the edge of membrane sheets or at flaps.
- Strength against loads caused by dynamic wind loads.
- Ageing together with PVC roofing sheet and bitumenious roof coverings.

Environmental declaration

No environmental declaration according to ISO 21930 has been worked out for Guardian Fastening System. The product contains no chemical substances listed on the Norwegian environmental authorities' observation list of compounds hazardous to human health or the environment.

Head Office:
SINTEF Building and Infrastructure
P.O.Box 124 Blindern – NO 0314 Oslo
Tel. + 47 22 96 55 55 – Fax + 47 22 69 94 38

e-mail: byggforsk@sintef.no
www.sintef.no/byggforsk

Trondheim:
SINTEF SINTEF Building and Infrastructure
7465 Trondheim
Tel. +47 73 59 30 00/33 90 – Fax +47 73 59 33 50/80

© Copyright SINTEF Byggforsk

Waste treatment/recycling

The components of the roofing system may be delivered to ordinary public waste disposal sites after the end of their working life.

6. Special conditions for use and installation

Anchor load design capacities

The number of fixing points is calculated according to SINTEF Byggforsk Design Sheet No. 544.206 or "TPF informs No. 5", using the design capacities shown in Table 1 and 2. Capacities in Table 1 based on testing according to NT Build 306 are usually applied in Norway and in the other Nordic countries. Capacities based on testing according to EOTA procedure ETAG 006 may also be used. Where a value in Table 2 is lower than the corresponding value in Table 1, the lowest value must be used.

Fastening in concrete

The drill hole diameter shall be 5,0 mm when fixing concrete screw CS-6,1 or nails BNRF, BN 56 and ASRF to a concrete substrate. The drill hole depth should be 30 mm, unless special precautions are taken regarding inspection. Minimum anchorage depth shall be 20 mm. Fixings in 50mm thick concrete without penetration requires precise length/depth control.

Fastening in light weight concrete

The anchorage depth must be minimum 75 mm when installing the Guardian light weight concrete screws LBS-80, LBS 60 and HD 61. When installing the lightweight concrete expander WS 8 L a hole with a diameter of 8 mm and a depth of 90 mm should be pre-drilled. The anchorage depth must be minimum 75 mm.

Fastening in metal sheets

Loadbearing profiled sheets made of steel shall have a minimum thickness of 0.7 mm. In particularly exposed areas the recommended minimum thickness is 0.8 mm for fixing roofing membranes to the steel sheets.

Fastening with Centrix-system

The Centrix electro-bonding system must be applied according to the manufacturer's user manual.

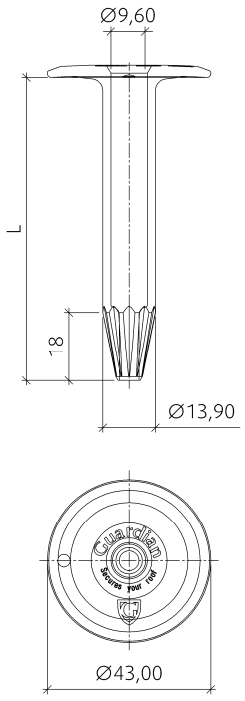

Fig.1
Tube washer R(P) 45

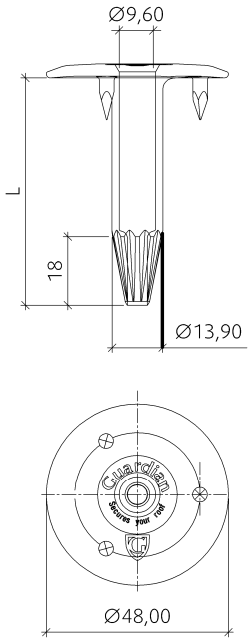

Fig. 2
Tube washer RB(P) 48 with studs

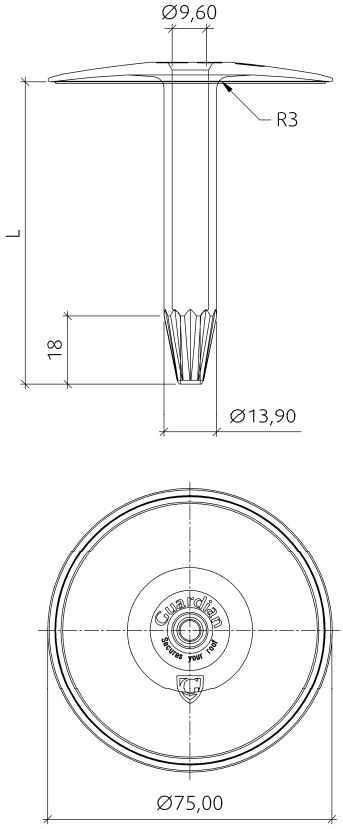

Fig. 3
Tube washer R(P) 75 for fixation of insulation

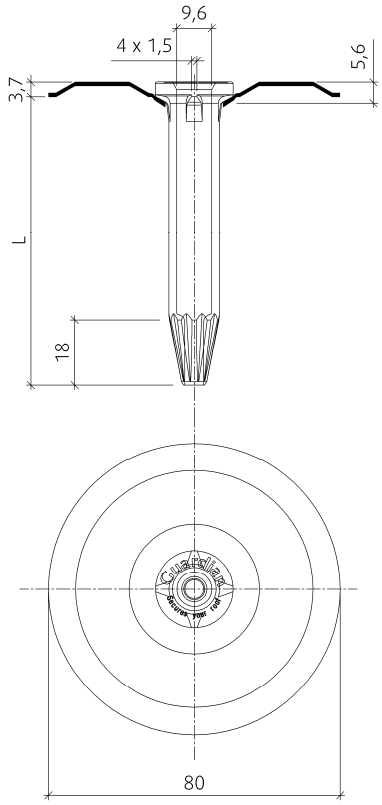

Fig. 4
Centrix plate SPC-80-F 2&4

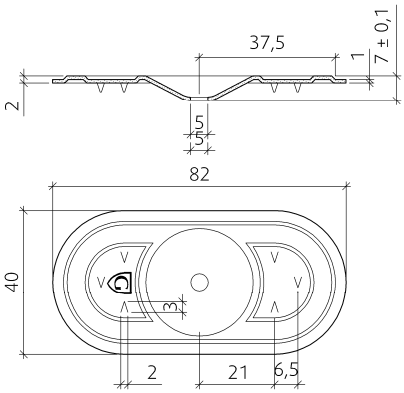

Fig. 5
SPBA 8240
Steel washer

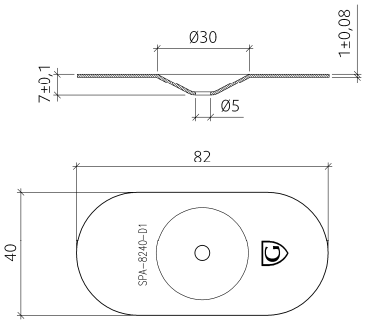

Fig. 6
SPA 8240-D
Steel washer

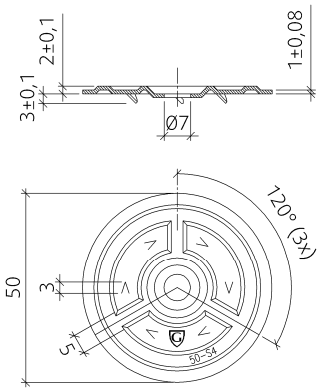

Fig. 7
SPB 50-S
Steel washer

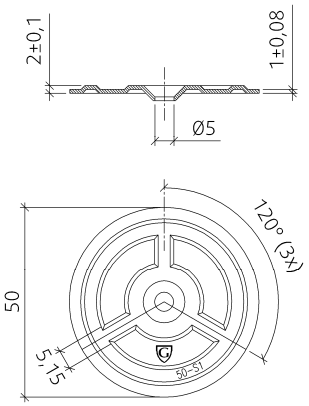

Fig. 8
SP 50-S
Steel washer

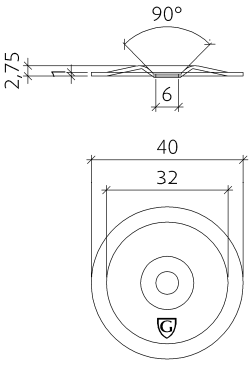

Fig. 9
SP 40-F
Steel washer

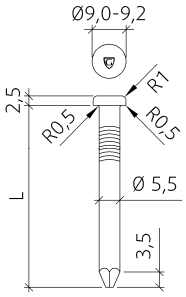

Fig. 10
BNRF
Concrete nail

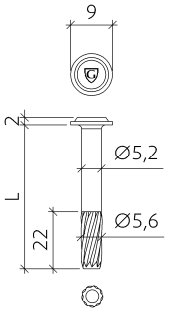

Fig.11
BN 56
Concrete nail

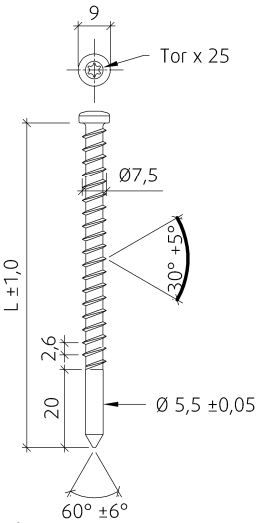

Fig. 12
ASRF 7,5
Adjustable concrete nail (used together with tube washer R-45 or R-75)

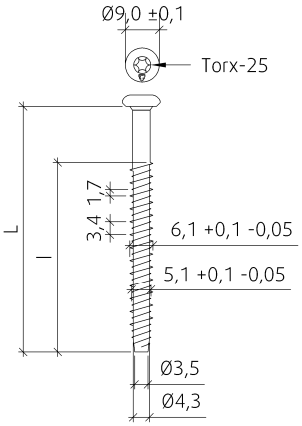

Fig. 13
CS 61
Concrete screw

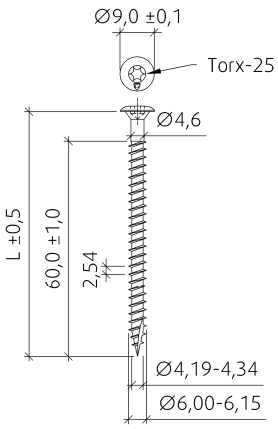

Fig. 14
HD 61
Screw for fixing in concrete and light weight concrete

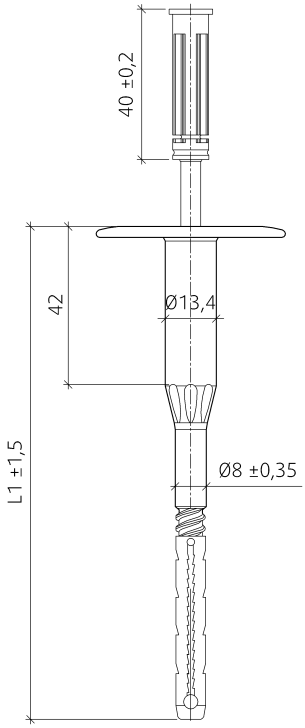

Fig. 15
CBF concrete plug

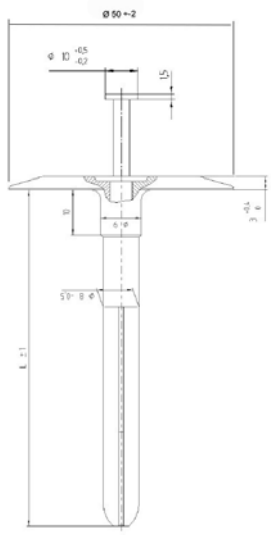

Fig. 16
CP concrete-plug

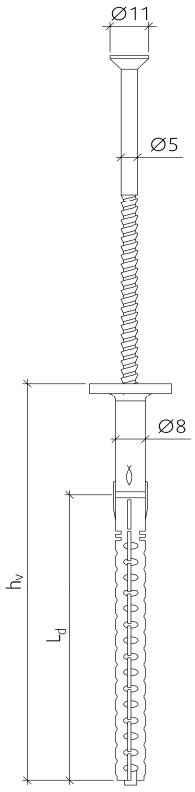

Fig. 17
WS-8L
Light weight concrete screw-plug

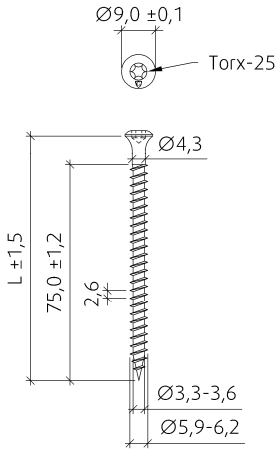

Fig. 18
LBS 60
Light weight concrete screw

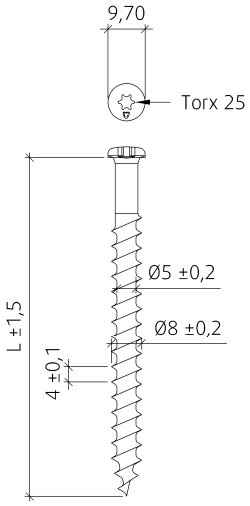

Fig. 19
LBS 80
Light weight concrete screw

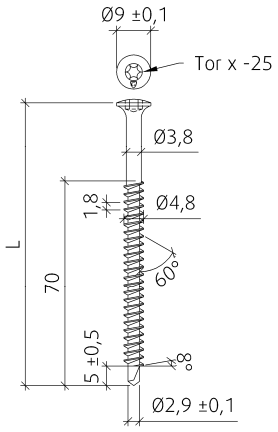

Fig. 20:
BS 48
Screw for fixing in metal sheets

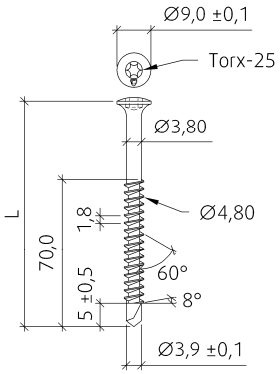

Fig. 21:
BSHD 48
Screw for fixing in metal sheets

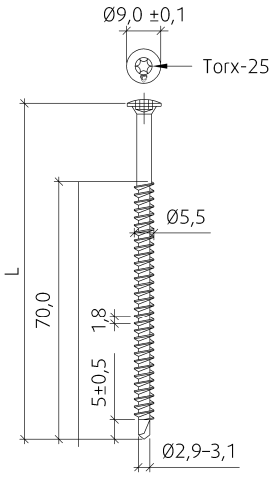

Fig. 22:
BS 55
Screw for fixing in metal sheets

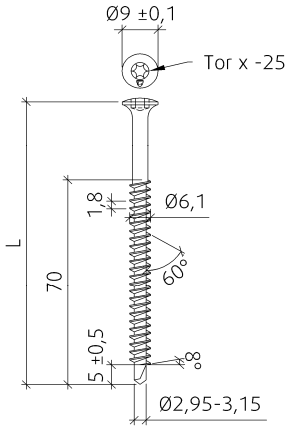

Fig. 23:
BS 61
Screw for fixing in metal sheets

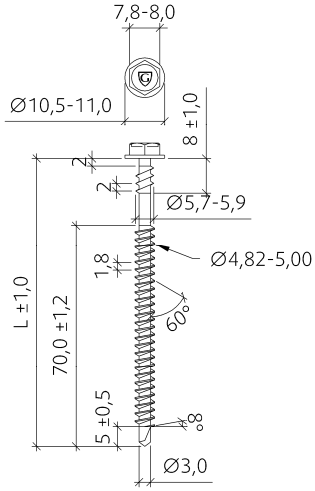

Fig. 24:
DBT 48
Screw for fixing in metal sheets

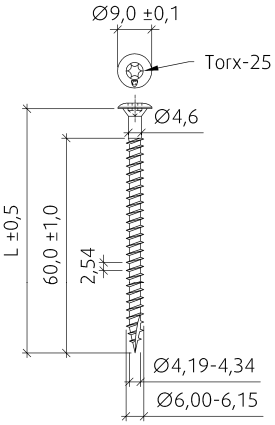

Fig. 25:
HD 61
Screw for fixing in metal sheets

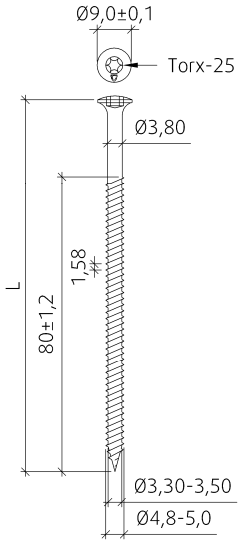

Fig. 26:
PS 48
Screw for fixing in metal sheets

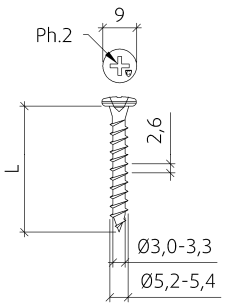

Fig. 27:
TS 52
Screw for fixing in wood

Table 1
Design capacities at ultimate limit state for Guardian Fastening System washers, fixing various roofing membranes. The values to be used must not exceed the design fastening capacities of the substructure fastening shown in Table 2 and 3.

Roofing material	Capacity in N/fastener [1)]									
	Plastic washers/plugs				Steel washers					Centrix
	R(P)45	RB(P)48	CBF concrete plug	CP concrete plug	SPBA 8240	SPA 8240-D	SPB 50-S	SP 50-S	SP 40-F	
Polymeric membranes fastened along membrane edge										
Protan SE 1.2 mm	**700** 600	**900** 780	**800** 700	**800** 700	**1000** 800	**700** 600			**650** 570	
Sikaplan PVC 12G	**700** 600	**750** 670				**700** 600				**850** 730
Trocal S PVC 1,5 mm						**650** 570				**700** 600
Alkorplan F 35176 1.2 mm							**750** 650			**850** 730
Cosmoplan F 1.2 mm							**750** 650			
Icopal Monarplan PVC 1,2 mm	**800** 700	**1000** 860								
Single layer bituminous membranes										
Trelleborg Elastofol MB 2000								**750** 650		
Icopal Mono PC	**1000** 800									
Icopal Monolight NXT	**750** 640									
Double layer bituminous membranes										
Phønix Double Layer (PF 3500 SBS/PF-GF 500 SBS)	**750** 600									
Icopal Double Layer	**900** 730									

1) Upper, bold value determined according to Nordtest method NT Build 307
Lower value determined according to EOTA procedure ETAG 006

Table 2
Design capacities at ultimate limit state for fixings with Guardian Fastening System to concrete- and wood- substructures, based on tests according to Nordtest method NT Build 306.

Fastener	Substructure	Design capacity N/fastener
ASRF	Concrete B 25	900
BNRF 5,5	Concrete B 25	1300
BN 56	Concrete B 25	1050
CS 61	Concrete B 25	1300
HD 61	Concrete B 25	1300
CBF Concrete plug	Concrete B 25	900
CP Concrete plug	Concrete B 25	1000
WS 8L Light weight concrete screw (minimum anchorage depth 75 mm)	Cellular concrete 400 kg/m³ 450 kg/m³ 500 kg/m³ 550 kg/m³	 350 500 700 800
LBS 60 (minimum anchorage depth 75 mm)	Cellular concrete 600 kg/m³	800
LBS 80 (minimum anchorage depth 75 mm)	Cellular concrete 600 kg/m³	800
HD 61 (minimum anchorage depth 75 mm)	Cellular concrete 600 kg/m³	800
TS 52	Multilayer wood 18 mm	1000
TS 52	Chipboard 18 mm	700
TS 52	Plywood 18 mm	1200
TS 52	OSB 18 mm	1000

Table 3
Design capacities at ultimate limit state for fixings with Guardian Fastening System to metal sheets substructures, based on tests according to Nordtest method NT Build 306.

Fastener	Substructure	Design capacity N/fastener
BS 48	Steel deck 0,65 mm	850
	Steel deck 0,70 mm	950
	Steel deck 0,75 mm	1000
	Steel deck 0,80 mm	1100
	Steel deck 0,90 mm	1250
	Steel deck 1,00 mm	1400
BSHD 48	Steel deck 1,00 mm	1200
	Steel deck 1,25 mm	1500
BS 55	Steel deck 0,65 mm	900
	Steel deck 0,70 mm	1000
	Steel deck 0,75 mm	1050
	Steel deck 0,80 mm	1150
	Steel deck 0,90 mm	1300
	Steel deck 1,00 mm	1500
BS 61	Steel deck 0,65 mm	950
	Steel deck 0,70 mm	1100
	Steel deck 0,75 mm	1200
	Steel deck 0,80 mm	1300
	Steel deck 0,90 mm	1600
	Steel deck 1,00 mm	1850
DBT 48	Steel deck 0,65 mm	850
	Steel deck 0,70 mm	950
	Steel deck 0,75 mm	1000
	Steel deck 0,80 mm	1100
	Steel deck 0,90 mm	1250
	Steel deck 1,00 mm	1400
PS 48	Steel deck 0,65 mm	900
	Steel deck 0,70 mm	1000
	Steel deck 0,75 mm	1050
	Steel deck 0,80 mm	1150
	Steel deck 0,90 mm	1300
	Steel deck 1,00 mm	1500
HD 61	Steel deck 0,75 mm	1000

7. Factory production control

Guardian Fastening System is subject to supervisory production control according to contract for SINTEF Byggforsk Technical Approval.

8. Basis for the approval

Fastening capacities in roofing membranes

Fastening capacities in membranes are based on system tests according to NT Build 307 or ETAG 006, documented in the following test reports:

- SINTEF Building and Infrastructure report O-21802-D dated 24.10.2007.
- SINTEF Building and Infrastructure report B21802F dated 08.05.2008.
- SINTEF Building and Infrastructure report B21802G dated 08.05.2008.
- SINTEF Building and Infrastructure report 3D0537, dated 02.04.2009.
- BDA Keuringsinstituut BV, report 0024-L-04/5 dated 27.02.2007.
- BDA Keuringsinstituut BV, report 0024-L-04/7 dated 27.02.2007.
- BDA Keuringsinstituut BV, report 0147-L-04/2 dated 27.02.2007.
- BDA Keuringsinstituut BV, report 0275-L-06/1 dated 11.12.2006.
- BDA Keuringsinstituut BV, report 0275-L-06/5 dated 08.01.2007.
- BDA Keuringsinstituut BV, report 0275-L-06/7 dated 05.10.2006.
- BDA Keuringsinstituut BV, report 0180-L-02/10 dated 01.03.2007.
- BDA Keuringsinstituut BV, report 0180-L-02/9 dated 01.03.2007.
- BDA Keuringsinstituut BV, report 0072-L-06/5 dated 01.03.2007.
- BDA Keuringsinstituut BV, report 0065-L-07/1 dated 10.03.2008.
- BDA Keuringsinstituut BV, report 0066-L-07/1 dated 10.03.2008.
- BDA Keuringsinstituut BV, report 0065-L-07/2 dated 10.03.2008.
- BDA Keuringsinstituut BV, report 0066-L-07/2 dated 10.03.2008.
- BDA Keuringsinstituut BV, report 0066-L-07/3 dated 10.03.2008.
- CSTC report DE 651 XE 973, dated 14.10.2005.
- Constructech Sweden AB, report 200810031212330001-11, dated 10.11.2008.
- Constructech Sweden AB, report 200810031212330001-21, dated 17.11.2008.
- Construtech Sweden AB, report 200806030837540001-6, dated 03.09.2008.

Pullout resistance from the substructure

Pullout resistance from different substructures is documented in the following test reports:

- SINTEF Building and Infrastructure report O-21802-C dated 23.10.2007.
- SINTEF Building and Infrastructure report O-21802-E dated 02.11.2007.
- SINTEF Building and Infrastructure report B21802H dated 08.05.2008.
- SINTEF Building and Infrastructure report B21802J dated 20.03.2009.
- BDA Keuringsinstituut BV, report 0062-L-07/1 dated 13.06.2007.
- BDA Keuringsinstituut BV, report 0339-L-04/2 dated 01.03.2007.
- BDA Keuringsinstituut BV, report 0171-L-03/3 dated 01.03.2007.
- BDA Keuringsinstituut BV, report 0171-L-03/4 dated 01.03.2007.

- BDA Keuringsinstituut BV, report 0065-L-04/2 dated 02.03.2007.

Unwinding

Safety against self unwinding is documented in the following test reports:

- Report 0063-L-07/1 dated 24.03.2007.
- Report 0081-L-04/2 dated 01.03.2007.
- SINTEF Building and Infrastructure report B21802J dated 20.03.2009.

Durability

Corrosion resistance of washers and screws has been tested in Kesternich chamber with 2.0 litres of SO_2 in accordance with ETAG 006 and DIN 50018. The test results are documented in the following reports:

- BDA Keuringsinstituut BV, report 006-L-07/1 dated 13.06.2007.
- BDA Keuringsinstituut BV report 0277-L-06 dated 05.12.2006.
- BDA Keuringsinstituut BV report 0345-L-02/2 dated 01.03.2007.
- BDA Keuringsinstituut BV report 0303-L-02/2 dated 27.02.2007.
- BDA Keuringsinstituut BV report 0005-L-04/2 dated 27.02.2007.

The durability of Guardian Fastening Plugs used together with bituminous and polymer membranes has been tested by SINTEF Building and Infrastucture, report O-21802-B dated 12.10.2007.

9. Marking

All fasteners, steel washers and tube washers are marked with the Guardian ”G” mark. The marking of tube washers may be combined with the Guardian name or another brand name for products produced under private label. All packaging is to be marked with product type and time of production. SINTEF’s approval mark for SINTEF Technical Approval No. 2516 may also be applied.

Approval mark

10. Liability

The holder/manufacturer has sole product responsibility according to existing law. Claims resulting from the use of the product cannot be brought against SINTEF beyond the provisions of Norwegian Standard NS 8402

11. Technical management

Project manager for this approval is Noralf Bakken, SINTEF Building and Infrastructure, dep. Building Materials and Constructions, Trondheim.

for SINTEF Building and Infrastructure

Steinar Klubben Nilsen
Approval Manager